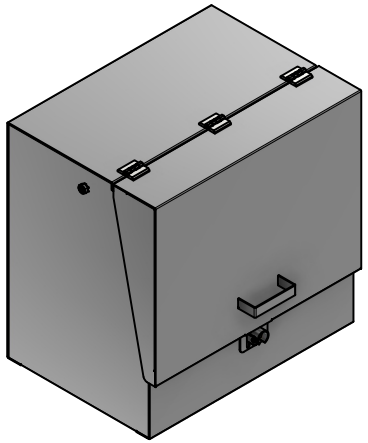

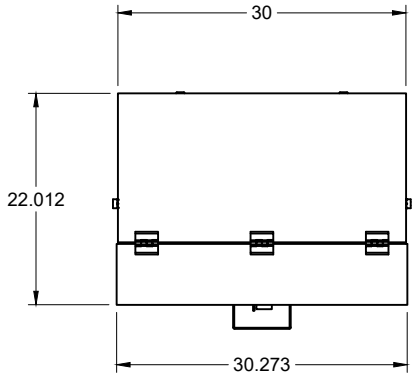

- SEE TRAVELER TO DETERMINE WHICH UNIVERSAL DEAD BREAK BRACKET (UDB) ACCOMPANIES ENCLOSURE, UNIVERSAL DEAD BREAK BRACKET SHOWN BELOW IS FOR SALES PURPOSES ONLY.
- TOTAL WEIGHT: 145.87 LBS
- NO MOUNTING HARDWARE INCLUDED.
- UNIVERSAL DEAD BREAK BRACKET (UDB) IS SHIPPED INSTALLED AND WILL NEED TO BE UNINSTALLED TO ATTACH THE LOADBREAK..
- OPTIONAL
  - NO BASE
  - 18" BASE
  - 30" BASE

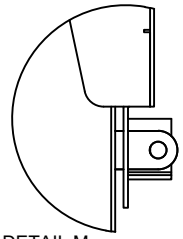

DETAIL M
SCALE 1:5

PENTA BOLT LOCKING BRACKET WITH PADLOCK / LOCK OUT TAG OUT PROVISION.

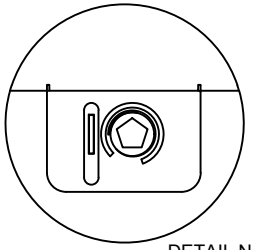

DETAIL N
SCALE 1:5

5/8-11 WELD NUT ON BOTH SIDES
TO ATTACH HARDWARE FOR LIFTING.

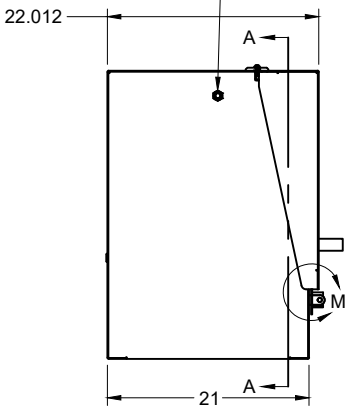

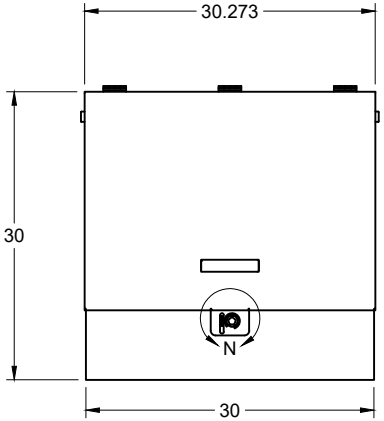

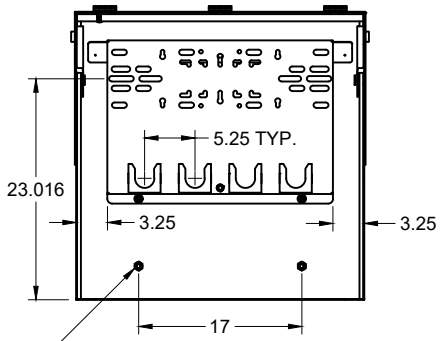

½"-13 WELD NUTS FOR BONDING
MUST BE FREE OF PAINT AND WELD SPATTER
NO SHARP EDGES

SECTION A-A
SCALE 1:20

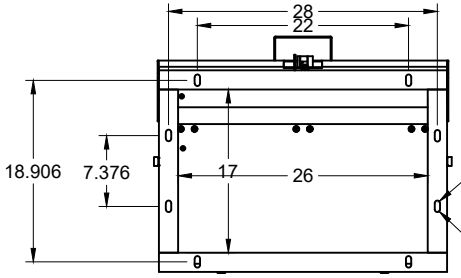

USE ½" HARDWARE TO SECURE ENCLOSURE TO BASE OR SLAB

Ø.563

TOLERANCES UNLESS OTHERWISE SPECIFIED .XXX +/- 0.03125	BOSS INCH UNLESS OTHERWISE SPECIFIED DIMENTIONS ARE IN INCHES IAW ANSI Y 14.5M-1982	CUSTOMER: ACDC BOSS	
		DWG No. 30HX30WX22D	
	DRAWN BY: Michael Lombard	PART #: 30HX30WX22D	REV. C

FINISH / POWDER: MUNSELL GREEN / PADMOUNT GREEN

CONFIDENTIALITY NOTICE: THIS DOCUMENT IS CONFIDENTIAL AND CONTAINS PROPRETARY INFORMATION AND INTELLECTUAL PROPERTY OF MCA FABRICATION. NEITHER THIS DOCUMENTATION NOR ANY OF THE INFORMATION CONTAINED HERIN MAY BE REPRODUCED OR DISCLOSED UNDER ANY CIRCUMSTANCES WITHOUT THE EXPRESS WRITTEN PERMISSION OF MCA FABRICATION. WHO RESERVES THE RIGHT TO SEEK INJUNCTIVE RELIEF, COMPENSATORY DAMAGES, PUNITIVE DAMAGES, COSTS AND ATTORNEYS' FEES FROM ANYONE WHO RECEIVES THIS DOCUMENTATION IN VIOLATION HEREOF.

DRAWING SCALE:	PAPER SIZE:	SHEET #
1:25	A	1/17

PARTS LIST		
ITEM	QTY	PART NUMBER
1	1	BODY WELDMENT
2	1	LID WELDMENT
4	1	UNIVERSAL DEADBREAK BRACKET 2
6	1	LOADBREAK ELBOW EXAMPLE FOR 22"DEEP ENCLOSURE

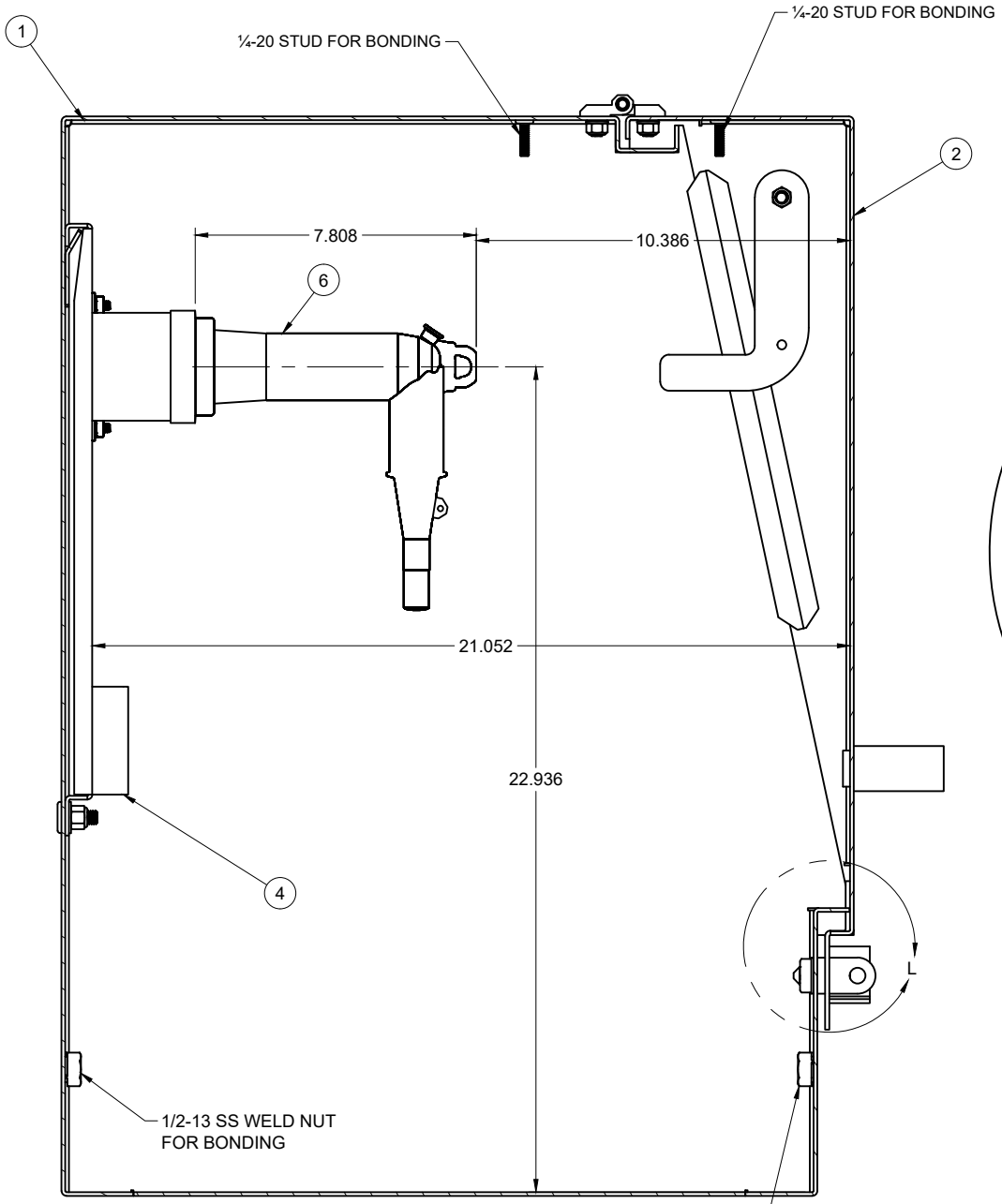

SECTION H-H
SCALE 1:5

1/2-13 SS WELD NUT
FOR BONDING

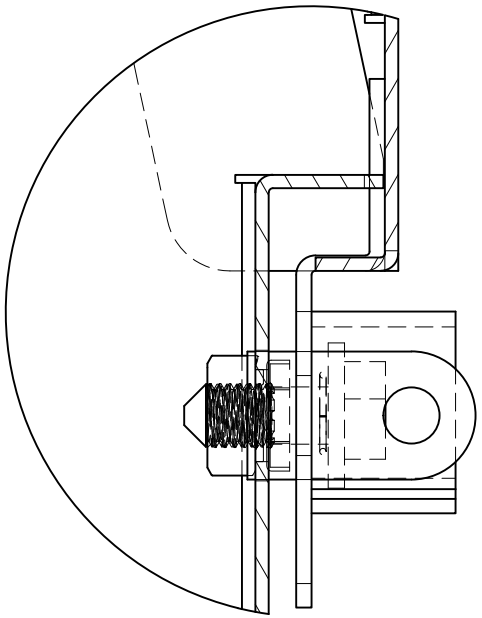

DETAIL L
SCALE 1:1.5

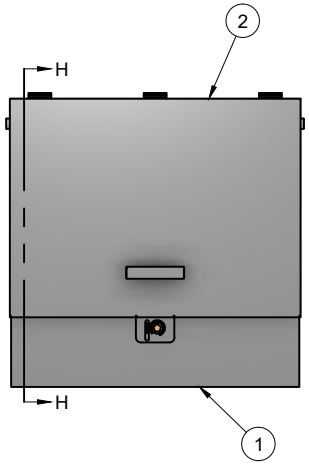

TOLERANCES UNLESS OTHERWISE SPECIFIED .XXX +/- 0.03125	BOSS INCH UNLESS OTHERWISE SPECIFIED DIMENTIONS ARE IN INCHES IAW ANSI Y 14.5M-1982	CUSTOMER: ACDC BOSS	
		DWG No. 30HX30WX22D	
	DRAWN BY: Michael Lombard	PART #: 30HX30WX22D	REV. C

FINISH / POWDER:

CONFIDENTIALITY NOTICE: THIS DOCUMENT IS CONFIDENTIAL AND CONTAINS PROPRIETARY INFORMATION AND INTELLECTUAL PROPERTY OF MCA FABRICATION. NEITHER THIS DOCUMENTATION NOR ANY OF THE INFORMATION CONTAINED HERIN MAY BE REPRODUCED OR DISCLOSED UNDER ANY CIRCUMSTANCES WITHOUT THE EXPRESS WRITTEN PERMISSION OF MCA FABRICATION. WHO RESERVES THE RIGHT TO SEEK INJUNCTIVE RELIEF, COMPENSATORY DAMAGES, PUNITIVE DAMAGES, COSTS AND ATTORNEYS' FEES FROM ANYONE WHO RECEIVES THIS DOCUMENTATION IN VIOLATION HEREOF.

DRAWING SCALE:	PAPER SIZE:	SHEET #
1:20	A	2/17